NETRONOME

PRODUCT BRIEF

Agilio® CX 2x25GbE SmartNIC

SMARTNIC FOR HIGH-PERFORMANCE CLOUD, SDN AND NFV NETWORKING

Data centers have always faced the challenge of massive storage and compute growth. Now with cloud-enabled, on-demand usage models, both cloud providers and traditional data centers face the added requirements of agility and rapid time to market. Software-based solutions can provide agility; although only Netronome SmartNICs provide the network agility and rapid time to market that data centers need for server based networking, while also enabling more secure VMs per server and conserving CPU cycles.

Cloud data centers need to service tens of thousands of tenants and manage applications spread across millions of VMs deployed in hundreds of thousands of servers. To enable the smooth transition of enterprise applications to the cloud, service providers are offering customers the ability to bring their own networks and associated security policies. A growing set of VMs and applications, accounting for more than 75% of traffic within the data center, require firewall rules to be directly associated with VMs. Ultimately this is causing an explosion of the number of virtual networks, security policies and keys that need to be provisioned and managed on a dynamic basis.

In the recent years, server-based networking and intelligent end points have evolved rapidly to enable scale and preserve costs. Typical inline network functions include tunnel encapsulation, load balancing and metering, exact match, wild card match, action-based stateless and stateful flow processing. Inline cryptography is now critical for secure in-transit data access. The need to apply granular policies closer to VMs and applications has resulted in implementing such inline network functions using the virtual switch datapath. However, with 10, 25, 40 and 100GbE connectivity in servers the number of CPU cores and power needed for such inline functions becomes prohibitive. To add to the problem, cache misses can cause undesired server performance hits and jitter. Agilio CX SmartNICs are purpose-built to solve such performance and scaling challenges. By efficiently offloading virtual switching, Agilio CX SmartNICs improve performance and lower CAPEX by freeing up valuable server CPU cores, enabling significantly more secure virtual machines per server. Agilio CX SmartNICs also reduce OPEX by enabling server-based SDN and NFV at higher scale and performance.

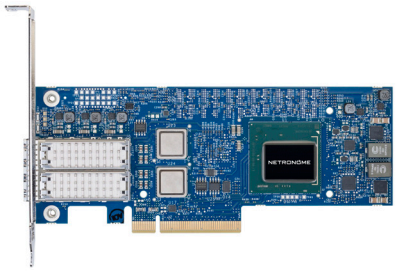

HIGHLIGHTS

- vSwitch datapath offload on popular OS platforms
- SR-IOV, DPDK, zero-copy, packet-direct and stateless offloads
- Server-based networking, processing up to 2M stateless and stateful flows
- Comprehensive network acceleration technologies
- Industry-leading intelligent dataplane architecture
- Fully programmable control for new network feature rollouts
- Flexible and scalable tunneling and match-action policies

AGILIO CX APPLICATIONS

- Cloud IaaS/PaaS
- Network Functions Virtualization (NFV)
- Data Center Microsegmentation
- Network Telemetry

SPECIFICATIONS

Interfaces	2-port 25GbE, SFP+ (10GbE) / SFP28 (25GbE)
Memory	2GB DDR3 onboard memory
Operating Systems*	Red Hat Enterprise Linux (RHEL), CentOS, Ubuntu
Hypervisors	Linux KVM
Ethernet	PCIe Base 3.0-compliant1.1- and 2.0-compatible 2.5, 5.0 or 8.0GT/s link rate x8 MSI-X vector per RX/TX queue pair Interrupt coalescing PCIe mapped LAN, UART
Connectivity	IEEE Std 802.3ae 10 Gigabit Ethernet IEEE Std 802.3ba 40 Gigabit Ethernet IEEE Std 802.3ad Link aggregation and failover IEEE Std 802.1Q.1p VLAN tags and priority IEEE P802.1Qaz D0.2 ETS Jumbo frame support (9.6KB) Configuration and diagnostic tools

**Please ask Netronome representative for the latest supported O/S and Hypervisors.*

ENVIRONMENTAL REQUIREMENTS

Operating Temp	0-55°C
Storage Temp	-40-70°C
Relative Humidity	5% to 95% non-condensing
Air Flow	350 LFM (min)

AGENCY APPROVALS

Certification	UL, FCC, EU, RoHS, CE, VCCI

ORDERING PART NUMBER

ISA-4000-25-2-2

Agilio CX 2x25GbE SmartNIC Block Diagram

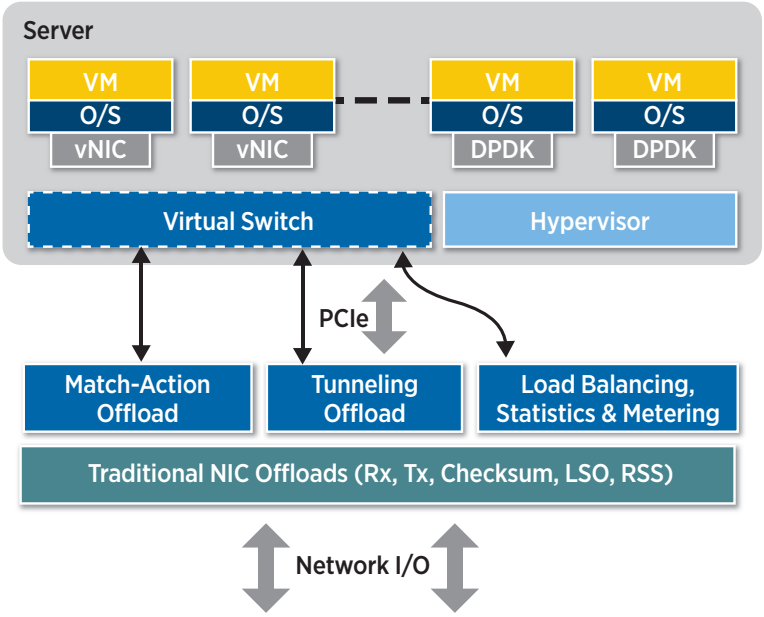

FEATURES

Virtual Switch Dataplane Offload

- VXLAN, NVGRE, MPLS tunnel encapsulation and de-encapsulation
- Programmable for custom tunnel types
- Flexible exact match-action and wildcard policy offloads
- In-hardware flow cache for cut-through acceleration
- Stateless and stateful load balancing
- Per-flow metering and QoS

Network Acceleration and Offloads

- TCP/UDP/IP stateless offload
- Receive-side scaling (RSS)
- Single-Root IOV (SR-IOV)
- Multiple queues per virtual machine
- DPDK, zero-copy, kernel bypass, packet direct

Acceleration of Compute-intensive Functions

- Deep packet inspection (DPI)
- Atomic operations
- Per-flow real-time statistics

Other Features

- Up to 2M flows on card
- Up to 500k tunnels
- P4 and C-programmable for fast feature rollouts

NETRONOME

Netronome Systems, Inc.
2903 Bunker Hill Lane, Suite 150
Santa Clara, CA 95054
Tel: 408.496.0022 | Fax: 408.586.0002
www.netronome.com

©2017 Netronome. All rights reserved.

Netronome, the Netronome logo, and Agilio are trademarks or registered trademarks of Netronome Systems, Inc. All other trademarks mentioned are registered trademarks or trademarks of their respective owners in the United States and other countries.

PB-AGILIO-CX-2x25G-1/17